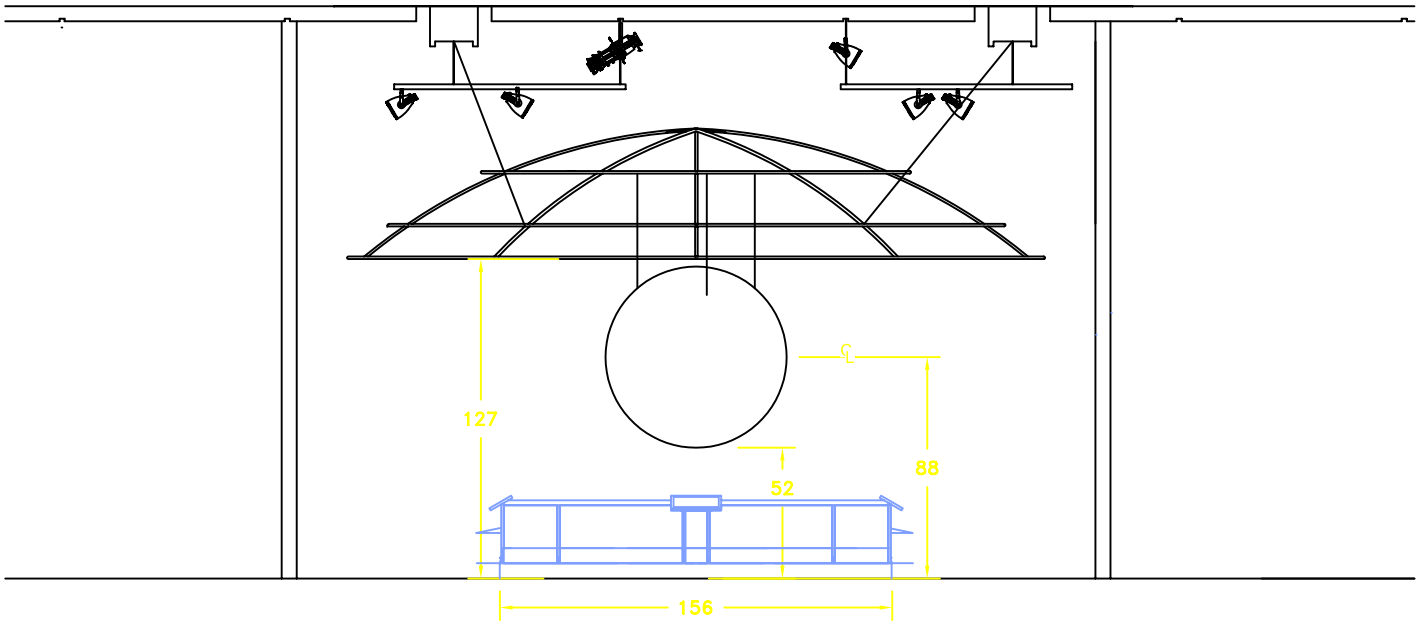
127
52
88
156

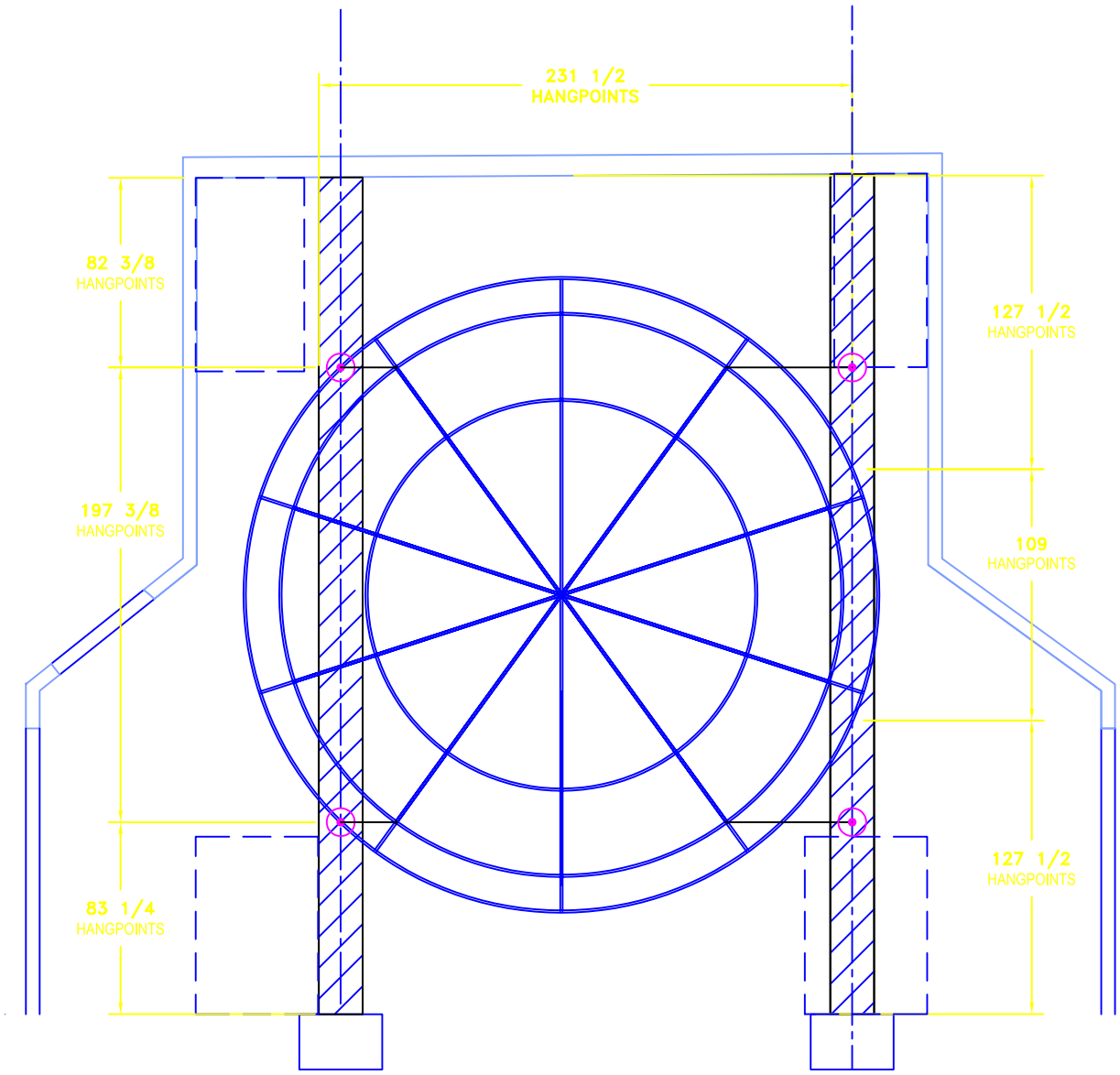
231 1/2
HANGPOINTS
82 3/8
HANGPOINTS
127 1/2
HANGPOINTS
197 3/8
HANGPOINTS
109
HANGPOINTS
127 1/2
HANGPOINTS
83 1/4
HANGPOINTS