Clark Planetarium
SOS Layout

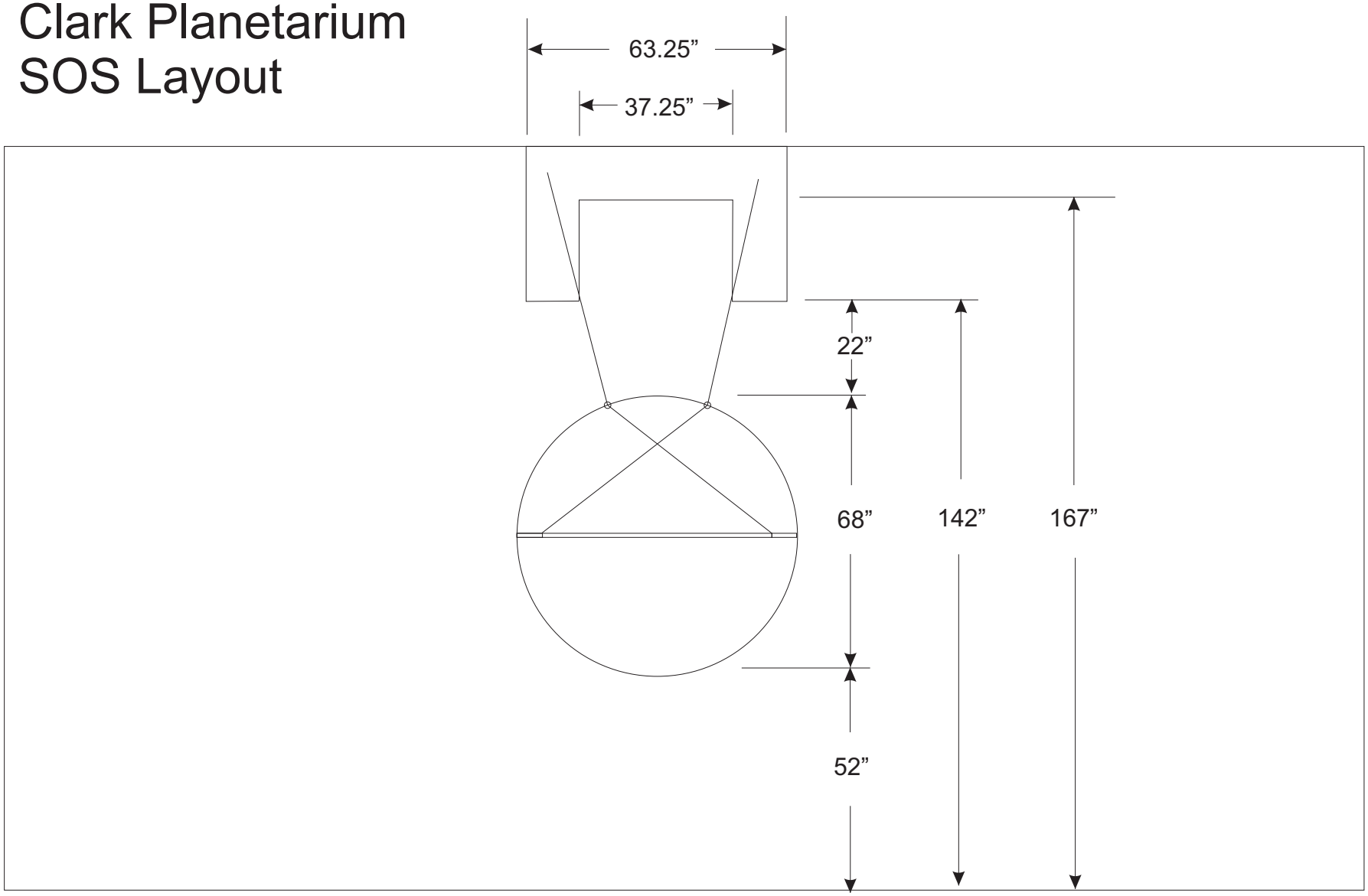

Clark Sphere Scale Drawing C.cdr